ASSEMBLY INSTRUCTION

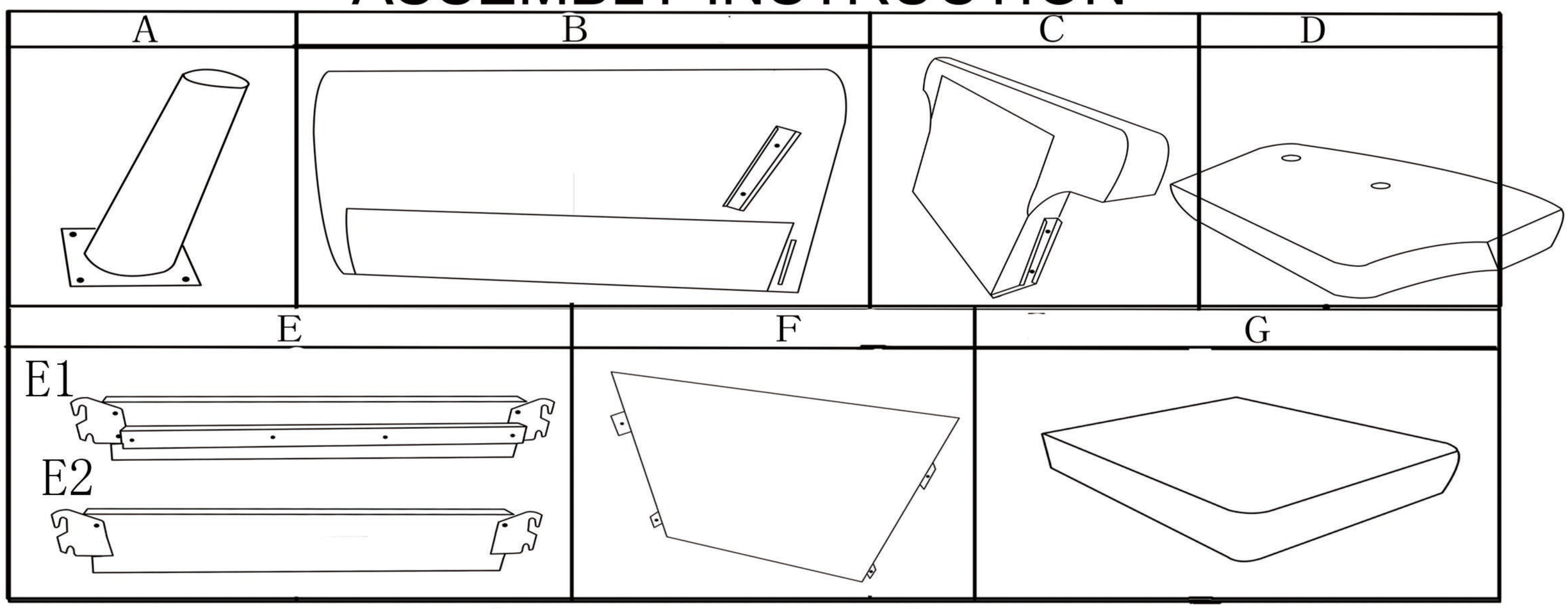

1.

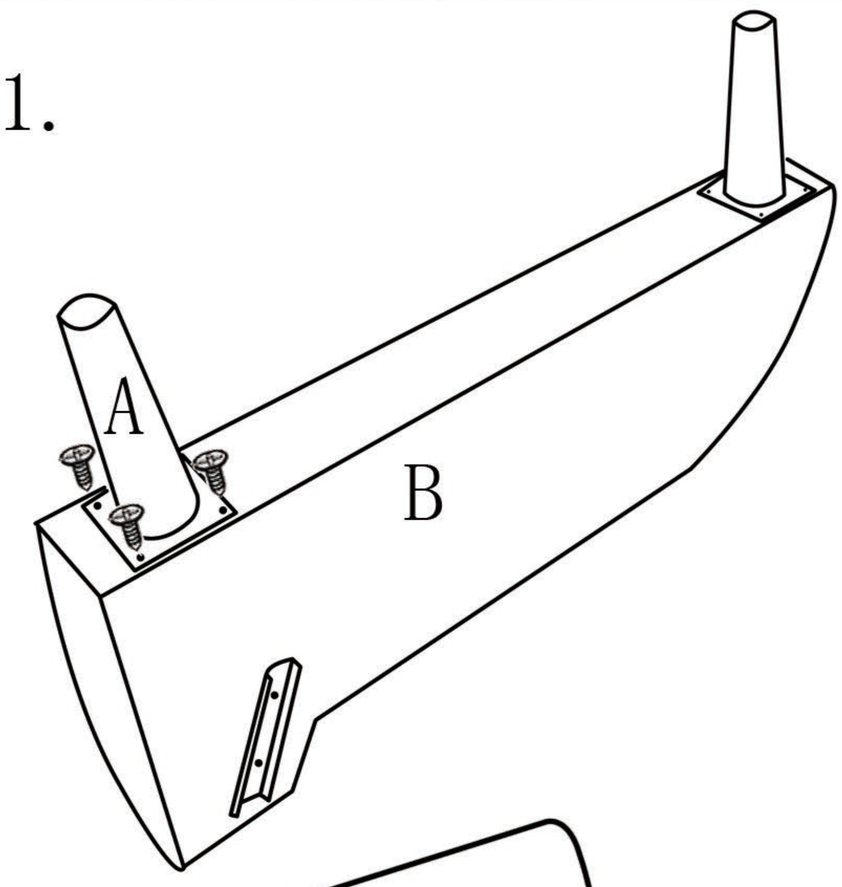

2.

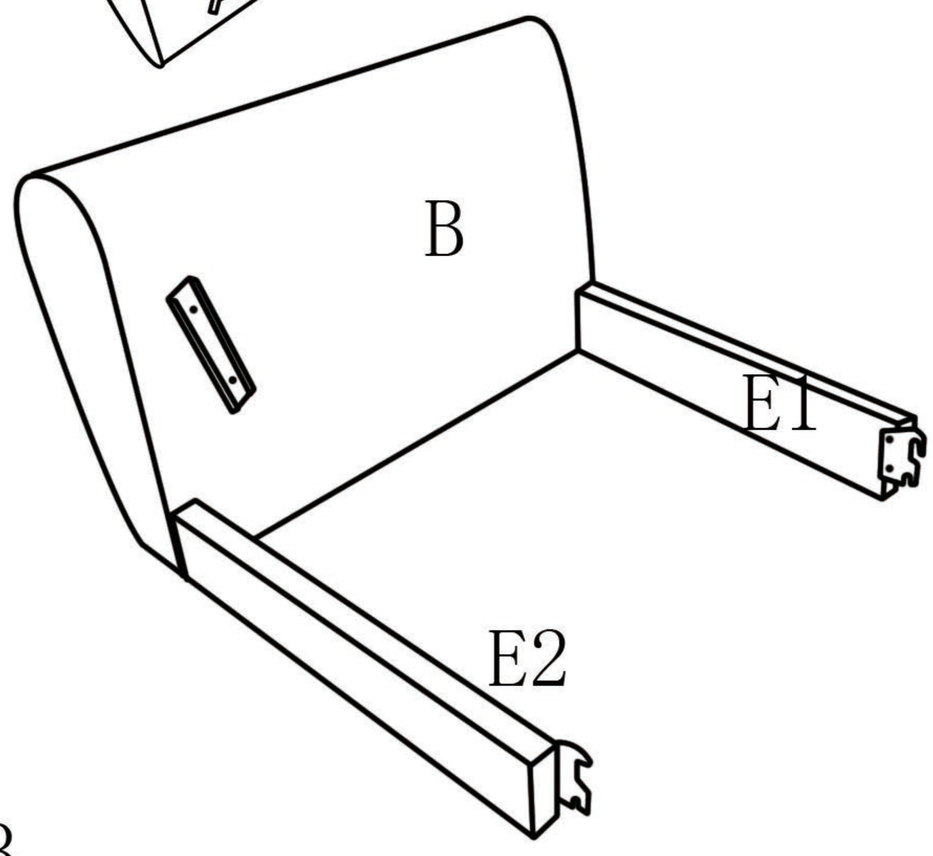

3.

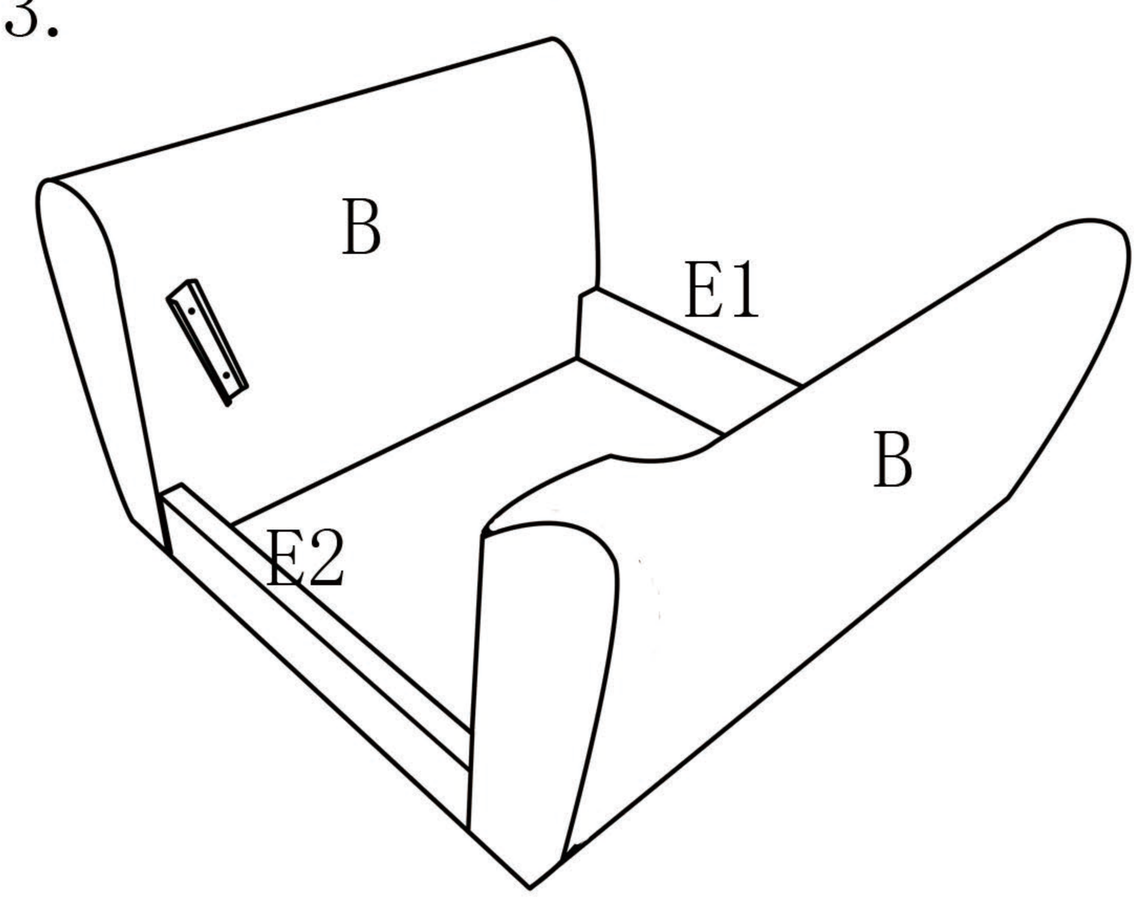

4.

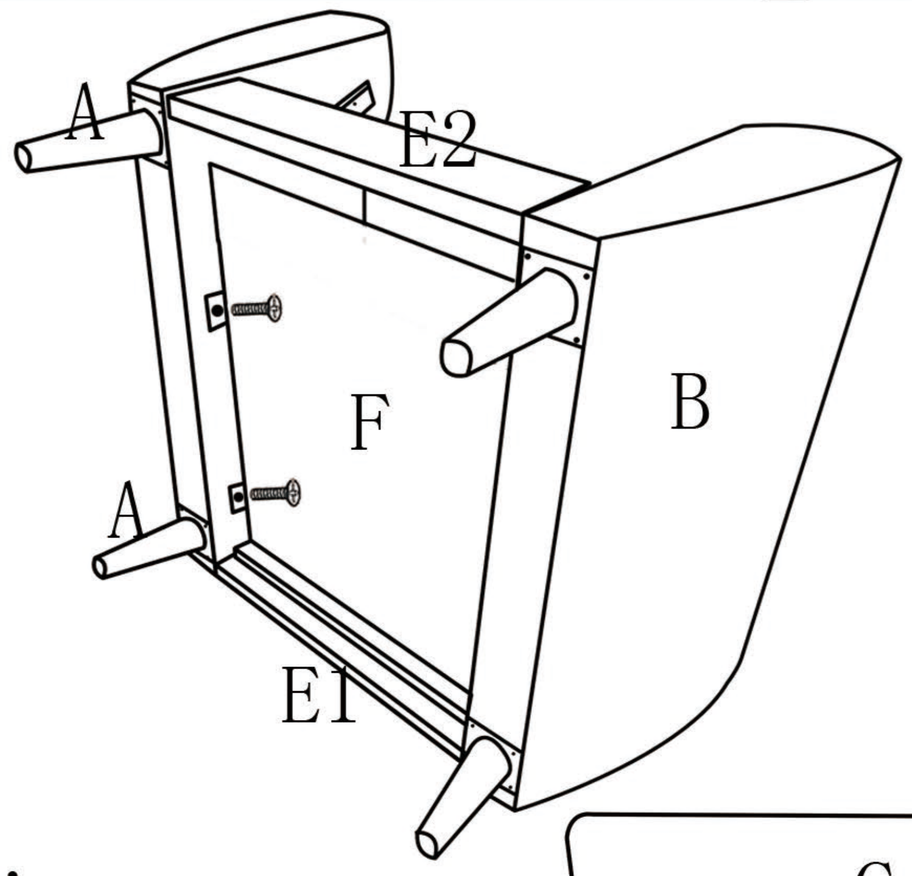

5.

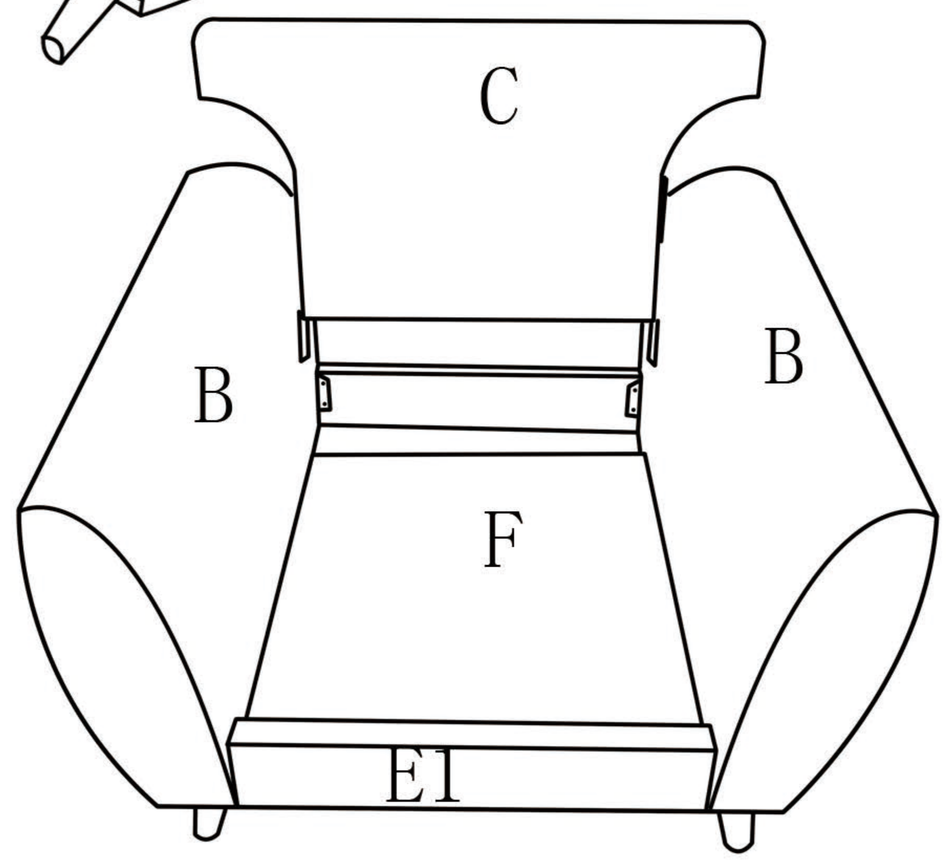
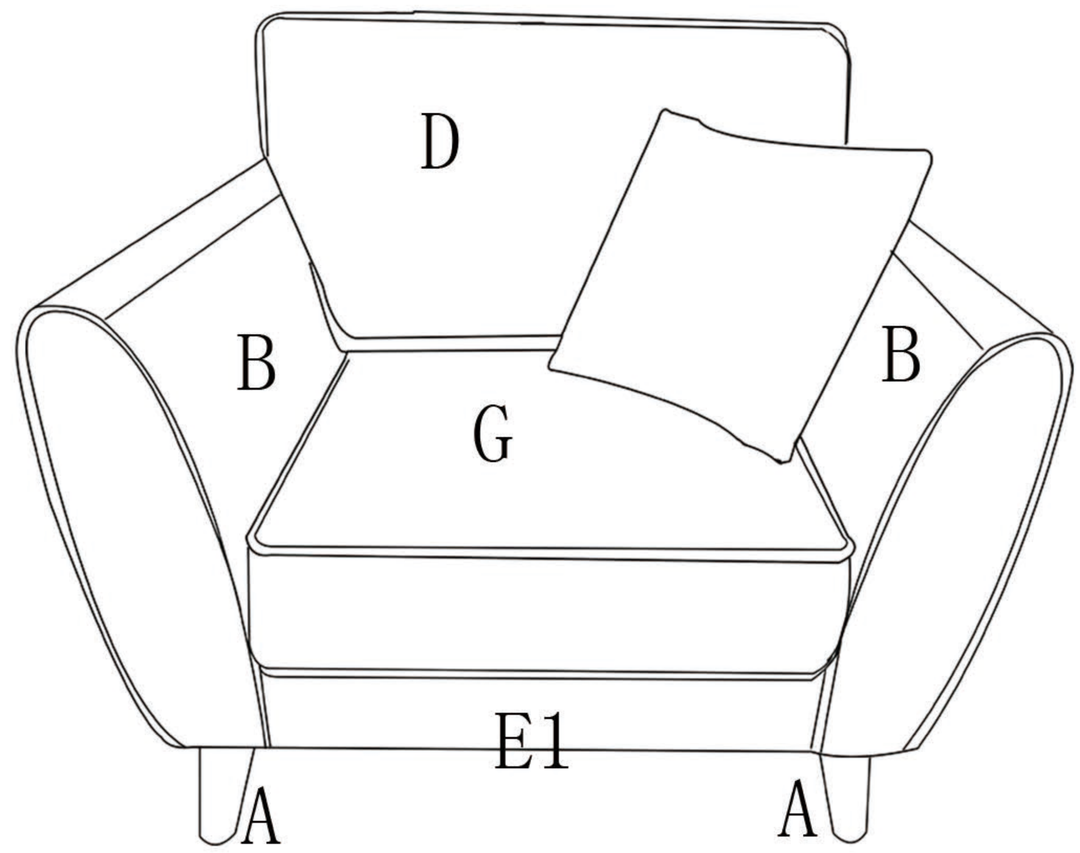
6.